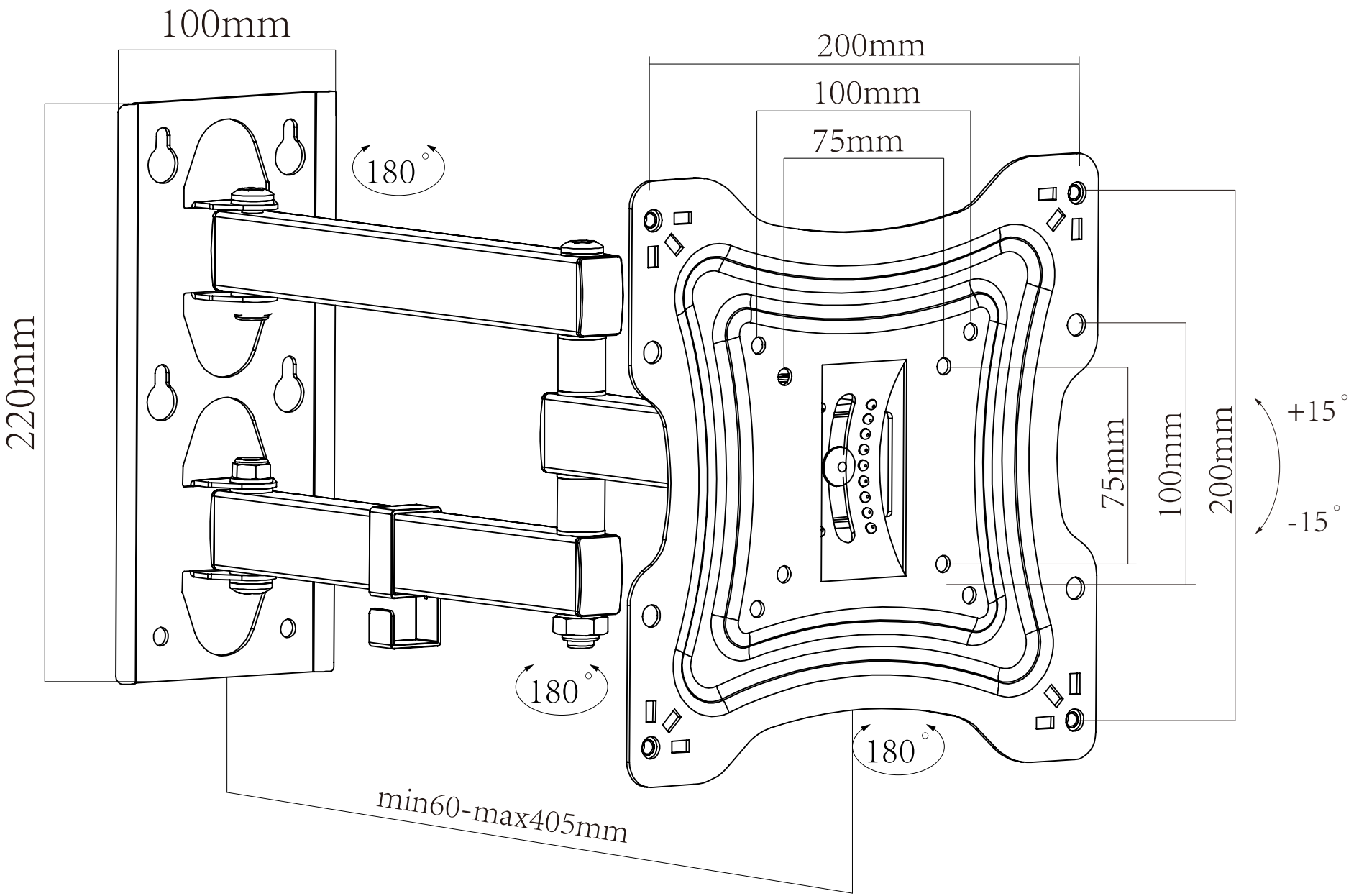
100mm
200mm
100mm
75mm
180°
220mm
75mm
100mm
200mm
+15°
-15°
180°
180°
min60-max405mm